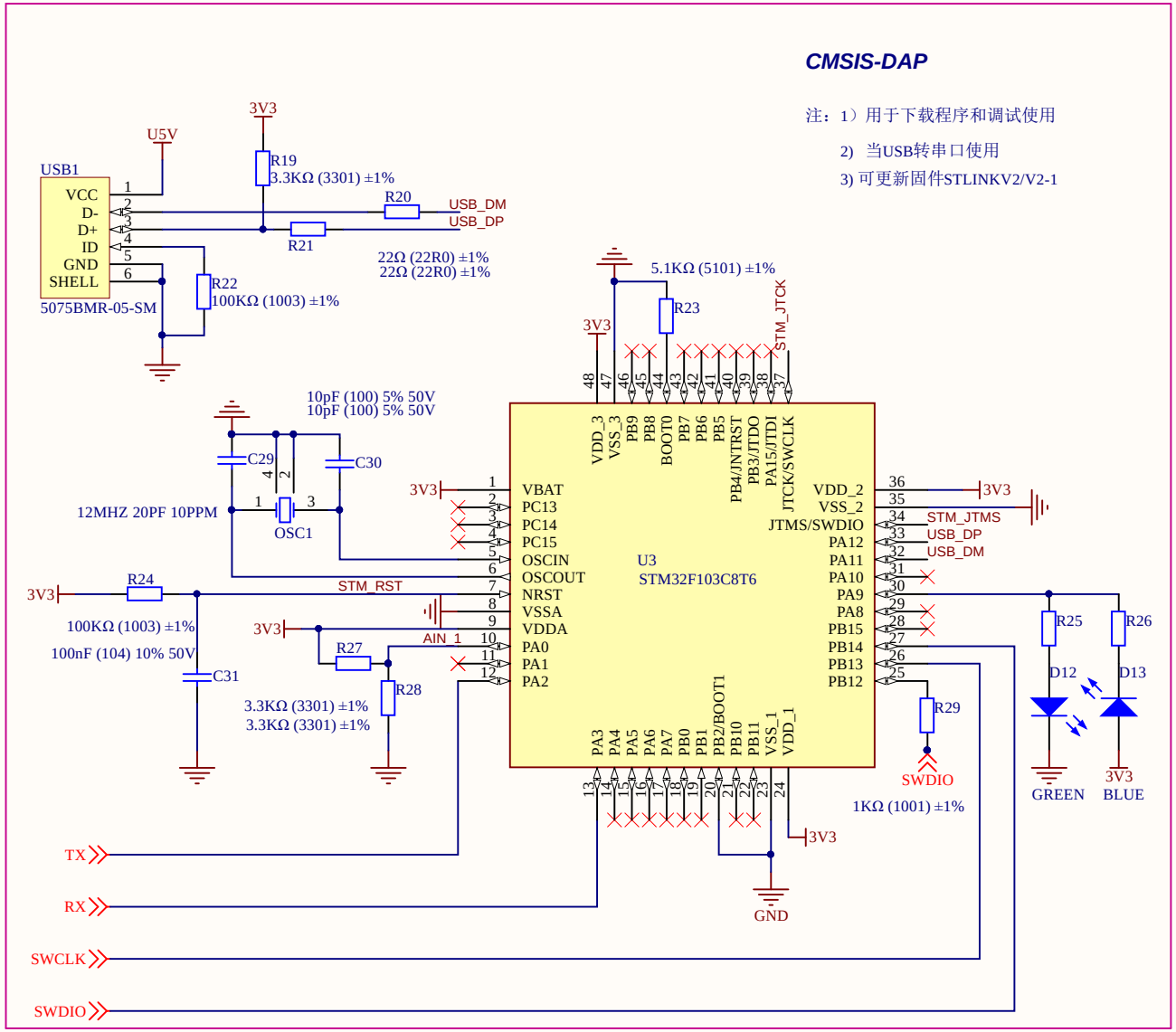

Title		
Size A4	Number	Revision
Date: 2019/6/25		Sheet of
File: C:\Users\..\CMSIS_DAP.SCHDOC		Drawn By:

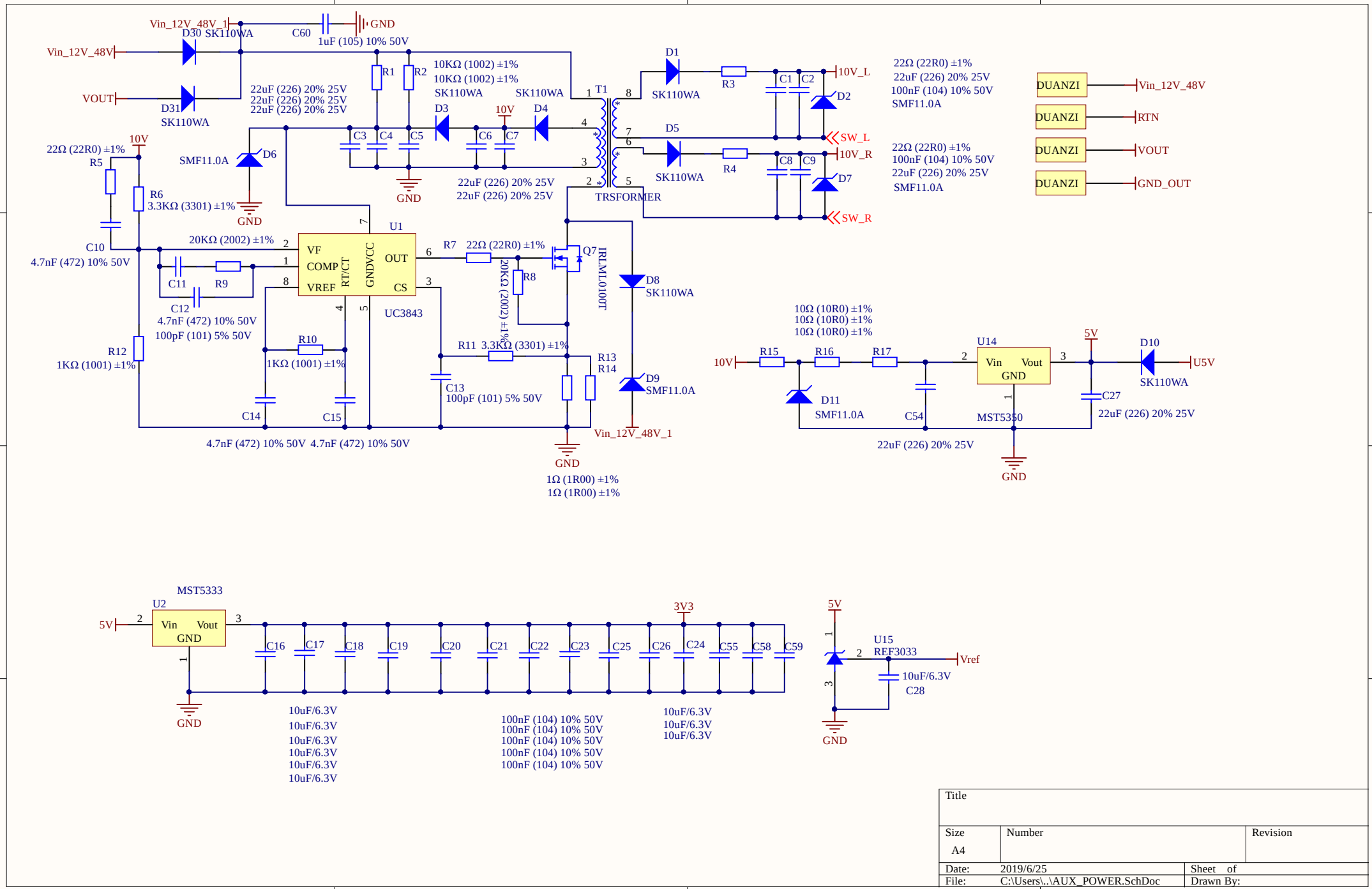

Title		
Size A4	Number	Revision
Date: 2019/6/25		Sheet of
File: C:\Users\..\AUX_POWER.SchDoc		Drawn By:

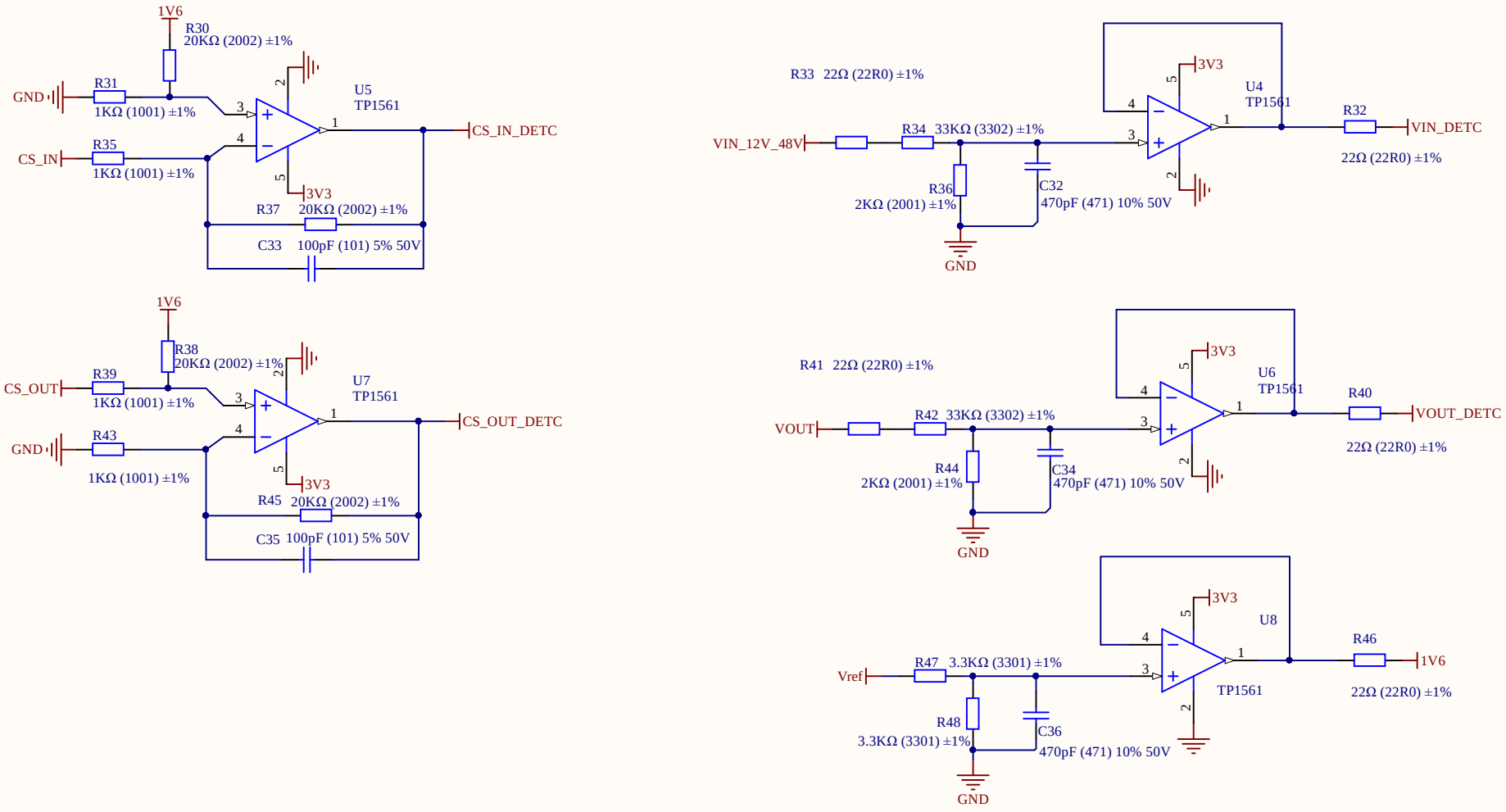

Title		
Size A4	Number	Revision
Date: 2019/6/25		Sheet of
File: C:\Users\..\Signal.SchDoc		Drawn By:

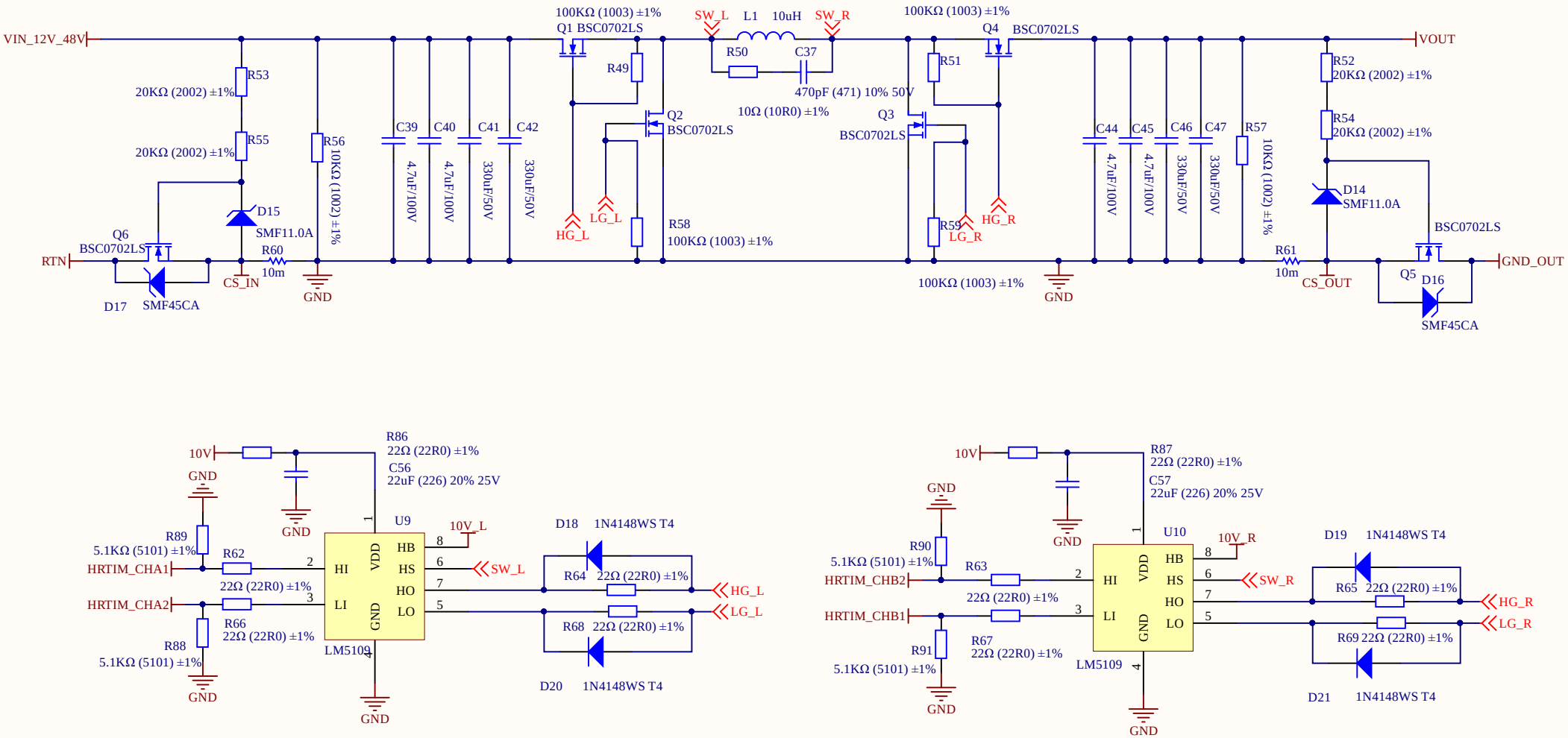

Title		
Size A4	Number	Revision
Date: 2019/6/25		Sheet of
File: C:\Users\..\SR_BUCK.SchDoc		Drawn By:

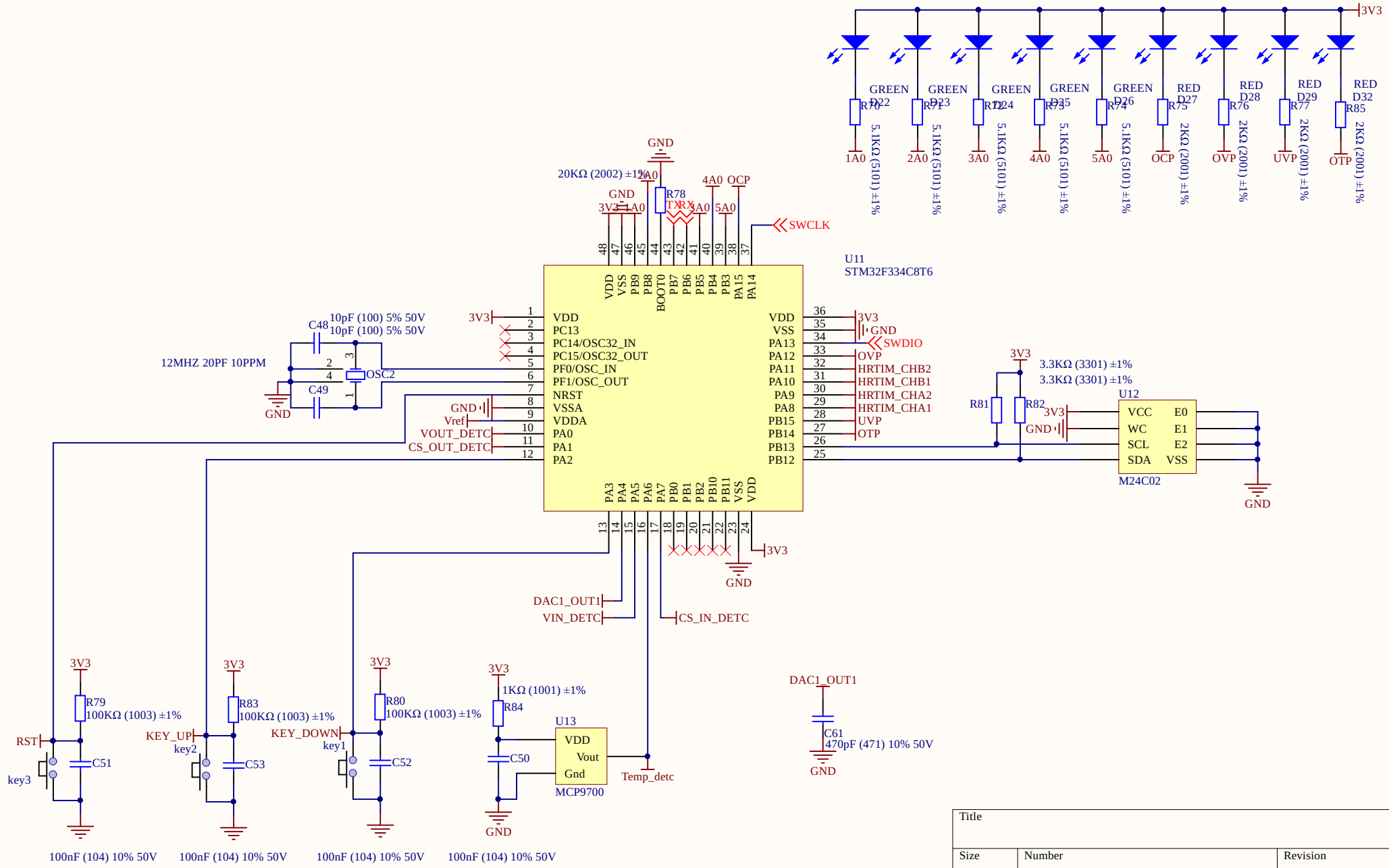

Title		
Size A4	Number	Revision
Date: 2019/6/25		Sheet of
File: C:\Users\..\STM32F334C8T6.SchDoc		Drawn By: